AC 1385 SERIES BLOWER

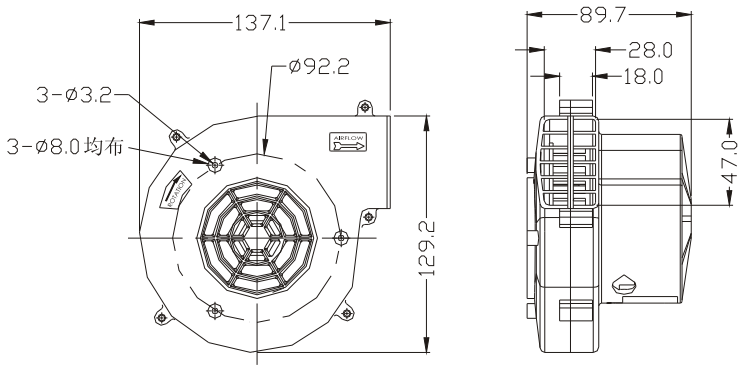

Unit:mm

Size: 137mmx129mmx90mm
Airflow: 41m³/hr
24CFM
Weight: 696g
Noise: 57dBA
Impeller: PBT UL94V-0 Reinforced Plastic
Frame: PP UL94V-0 Reinforced Plastic
Motor: Shaded Pole Induction Motor
Lead Wire: SPT-2 or Customize Design (Optional)
Insulation: Class B, T. P. F.
Safety: UL.CUL.CE
Operation Temperature: -30℃~+70℃
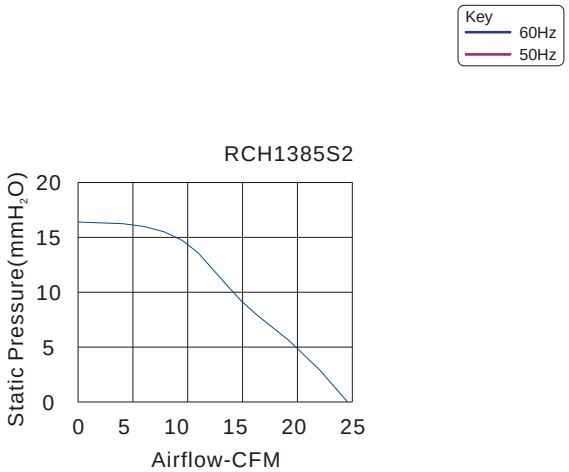
Model	Bearing System	Voltage VAC	Freq. Hz	Current A	Power W	Speed RPM	Noise dBA	Air Flow		Static Pressure (mmH_2O)	Weight Gram
								M^3/hr	CFM		
RCH1385S2	Sleeve	120	60	0.65	39	3000	57	41	24	16	696