77x76x30mm (Blower)

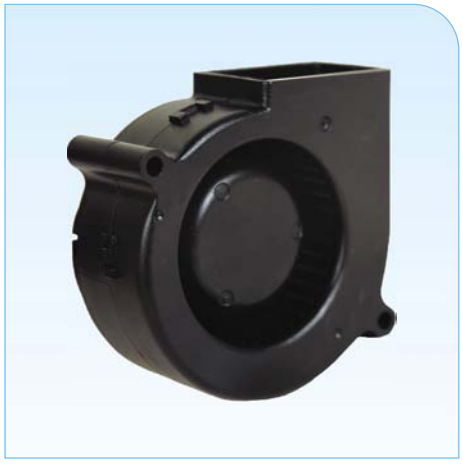

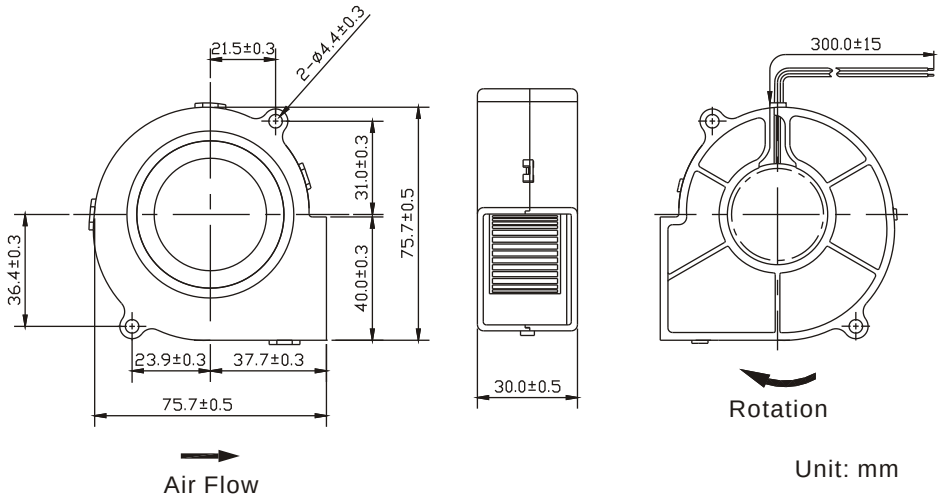

Unit: mm

General Specification:

- Frame and Impeller : Thermal Plastic , UL 94V-0
- Lead Wires : UL Type
  (+) : Red (-) : Black
- Operation Temperature : -10℃～70℃、
  35%～85%RH
- Storage Temperature : -40℃～80℃、
  35%～85%RH

Motor Protection:

- Impedance Protected
- Reverse Polarity Protected

Performance Curves

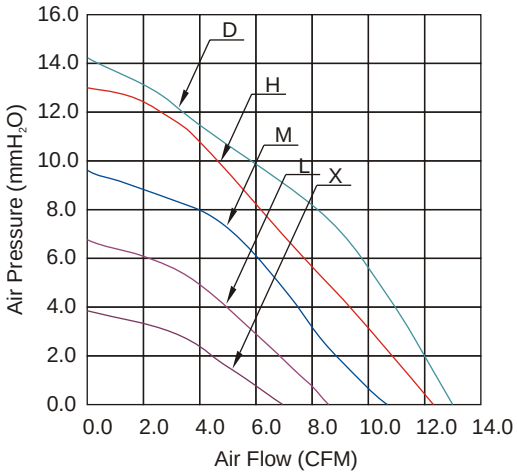

Listed Model	Bearing System	Rated Voltage	Operation Voltage	Rated Current	Rated Speed	Air Flow	Air Pressure	Noise Level	Available Features (Optional)				Weight
		VDC	VDC	A	RPM	CFM	mmH_2O	dBA	Tachometer Output	Rotation Detector	Thermal Control	Pulse Width Modulation	g
RBD7530S1	Sleeve	12	6.0~13.8	0.50	3,800	12.9	14.1	45	•	•			87
RBH7530S1			6.0~13.8	0.45	3,500	12.3	13.1	43	•	•			
RBM7530S1			6.0~13.8	0.27	3,000	10.3	9.6	38	•	•			
RBL7530S1			6.0~13.8	0.18	2,500	8.6	6.4	36	•	•			
RBX7530S1			6.0~13.8	0.13	2,000	6.9	3.7	28	•	•			
RBD7530B1	Ball		6.0~13.8	0.50	3,800	12.9	14.1	45	•	•			
RBH7530B1			6.0~13.8	0.45	3,500	12.3	13.1	43	•	•			
RBM7530B1			6.0~13.8	0.27	3,000	10.3	9.6	38	•	•			
RBL7530B1			6.0~13.8	0.18	2,500	8.6	6.4	36	•	•			
RBX7530B1			6.0~13.8	0.13	2,000	6.9	3.7	28	•	•			
RBD7530S2	Sleeve	24	12.0~27.6	0.30	3,800	12.9	14.1	45	•	•			
RBH7530S2			12.0~27.6	0.24	3,500	12.3	13.1	43	•	•			
RBM7530S2			12.0~27.6	0.18	3,000	10.3	9.6	38	•	•			
RBL7530S2			12.0~27.6	0.12	2,500	8.6	6.4	36	•	•			
RBX7530S2			12.0~27.6	0.09	2,000	6.9	3.7	28	•	•			
RBD7530B2	Ball		12.0~27.6	0.30	3,800	12.9	14.1	45	•	•			
RBH7530B2			12.0~27.6	0.24	3,500	12.3	13.1	43	•	•			
RBM7530B2			12.0~27.6	0.18	3,000	10.3	9.6	38	•	•			
RBL7530B2			12.0~27.6	0.12	2,500	8.6	6.4	36	•	•			
RBX7530B2			12.0~27.6	0.09	2,000	6.9	3.7	28	•	•			

Notes: ◎All readings are typical values at rated voltage.
◎Specifications subjected to change without prior notice.