TRICORE

BRUSHLESS MOTOR

BSM14 SERIES

Output : APPROX 5W~10W
Weight : 9.5g (approx)

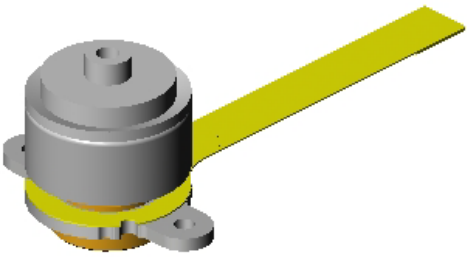

Application

Digital Light Processing

MODEL	VOLTAGE		NO LOAD		AT MAXIMUM EFFICIENCY					STALL		
	OPERATING RANGE	NOMINAL	SPEED	CURRENT	SPEED	CURRENT	TORQUE		OUTPUT	TORQUE		CURRENT
			r/min	A	r/min	A	g-cm	mN-m	W	g-cm	mN-m	A
BSM1401	12V ± 5%	12V	17540	0.12	15558	0.93	46.45	4.552	7.412	411.09	40.29	7.29
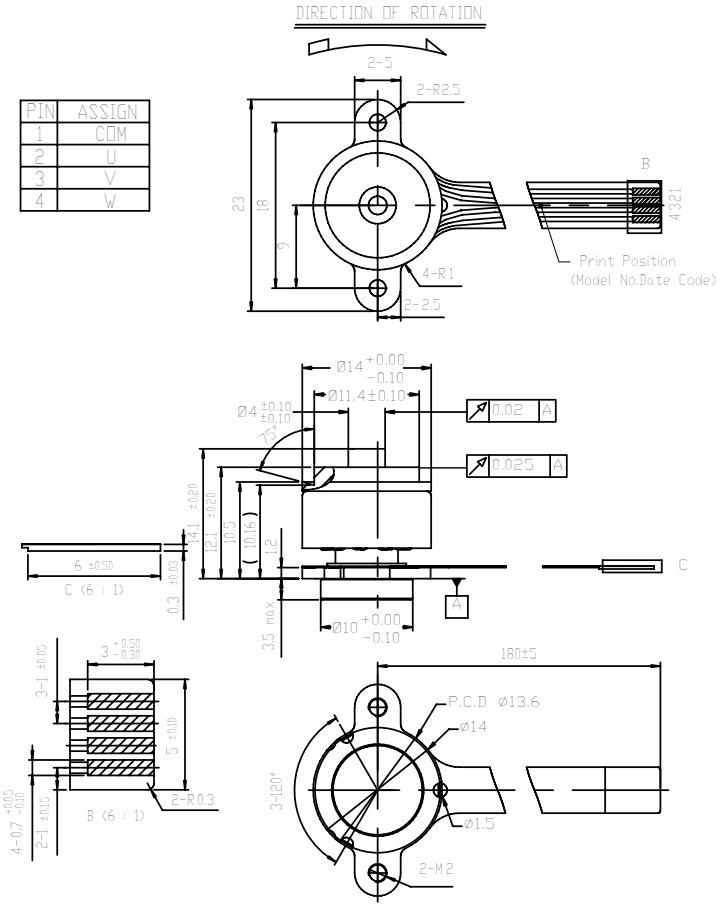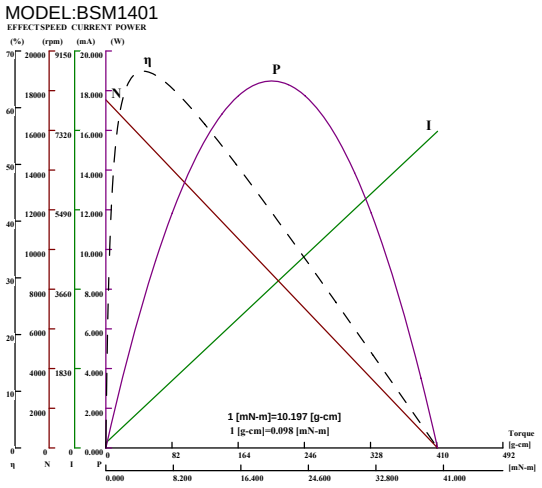
Specification BSM1401