TRICORE

## BRUSHLESS MOTOR

# BSM29 SERIES

Output : APPROX 0.05W~1.0W
Weight : 19g (approx)

### Application

Audio and Visual Equiments
Portable DVD Player

| MODEL | VOLTAGE | | NO LOAD | | AT MAXIMUM EFFICIENCY | | | | | STALL | | |
|---|---|---|---|---|---|---|---|---|---|---|---|---|
| | OPERATING RANGE | NOMINAL | SPEED | CURRENT | SPEED | CURRENT | TORQUE | | OUTPUT | TORQUE | | CURRENT |
| | | | r/min | A | r/min | A | g-cm | mN-m | W | g-cm | mN-m | A |
| BSM2901 | 2.4~3.5 | 3.0 | 2700 | 0.04 | 1987 | 0.11 | 6.21 | 0.61 | 0.12 | 23.53 | 2.31 | 0.30 |

### Specification BSM2901
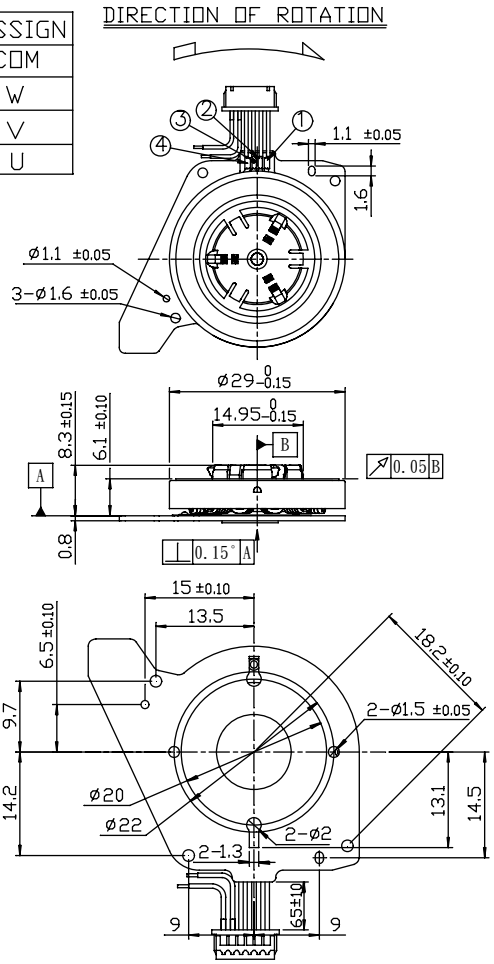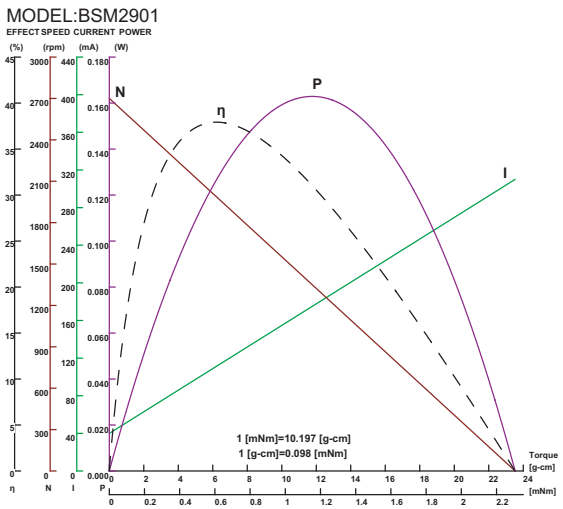
| PIN | ASSIGN |
|---|---|
| 1 | COM |
| 2 | W |
| 3 | V |
| 4 | U |