TRICORE

BRUSHLESS MOTOR

BSM29 SERIES

Output : APPROX 0.05W~1.0W
Weight : 30g (approx)

Application

Audio and Visual Equiments
Portable DVD Player

MODEL	VOLTAGE		NO LOAD		AT MAXIMUM EFFICIENCY					STALL		
	OPERATING RANGE	NOMINAL	SPEED	CURRENT	SPEED	CURRENT	TORQUE		OUTPUT	TORQUE		CURRENT
			r/min	A	r/min	A	g-cm	mN-m	W	g-cm	mN-m	A
BSM2902	2.4~3.5	3.0	2700	0.04	1987	0.11	6.21	0.61	0.12	23.53	2.31	0.30

Specification BSM2092
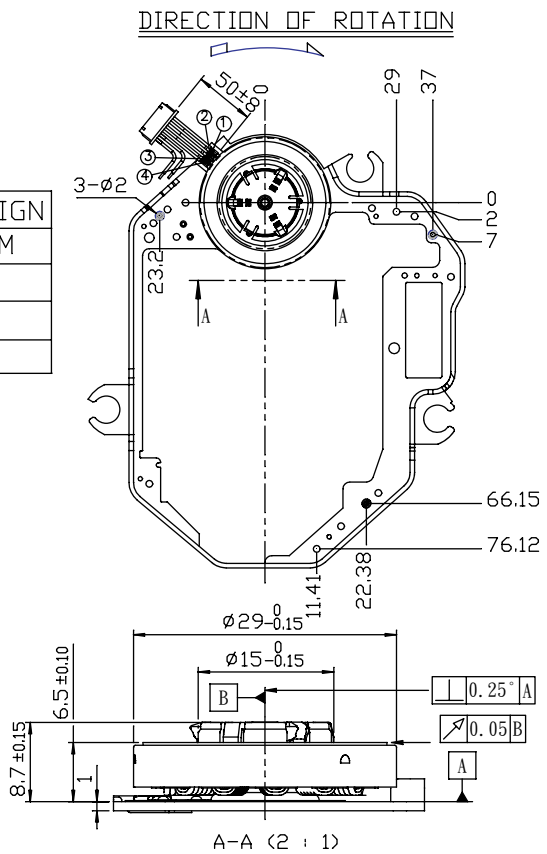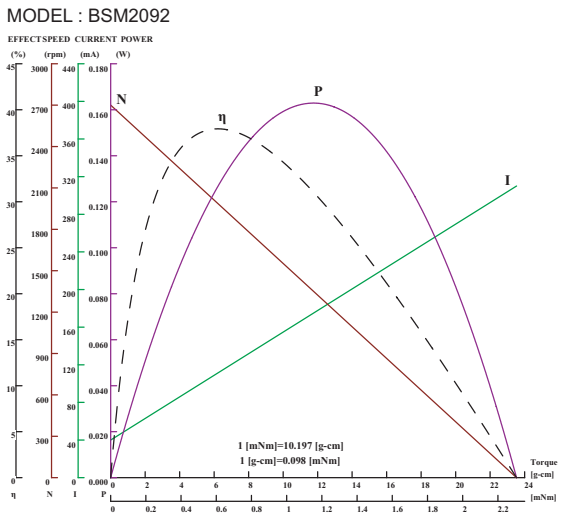
PIN	ASSIGN
1	COM
2	W
3	V
4	U