TRICORE

MICRO MOTOR

FM15 SERIES

Output : APPROX 0.2~1.5W
Weight : 11g (approx)

Application

Blood Pressure Meter
Precision Instruments
CD/DVD ROM
CD Player

MODEL	VOLTAGE		NO LOAD		AT MAXIMUM EFFICIENCY					STALL		
	OPERATING RANGE	NOMINAL	SPEED	CURRENT	SPEED	CURRENT	TORQUE		OUTPUT	TORQUE		CURRENT
			r/min	A	r/min	A	g-cm	mN-m	W	g-cm	mN-m	A
FM1502	3.7~9.0	6	10862	0.02	867	0.09	3.54	0.35	0.32	17.62	1.73	0.37
FM1505	3.5~8.0	6.8	14873	0.04	11809	0.17	5.35	0.52	0.65	25.95	2.54	0.65
FM1506	3.5~6.0	5	11600	0.09	9900	0.18	9.80	0.47	0.48	21.00	2.10	1.20
FM1508	3.5~6.0	4.7	9800	0.09	8200	0.13	3.80	0.37	0.32	14.00	1.37	1.20

Specification FM1502

DIRECTION OF ROTATION

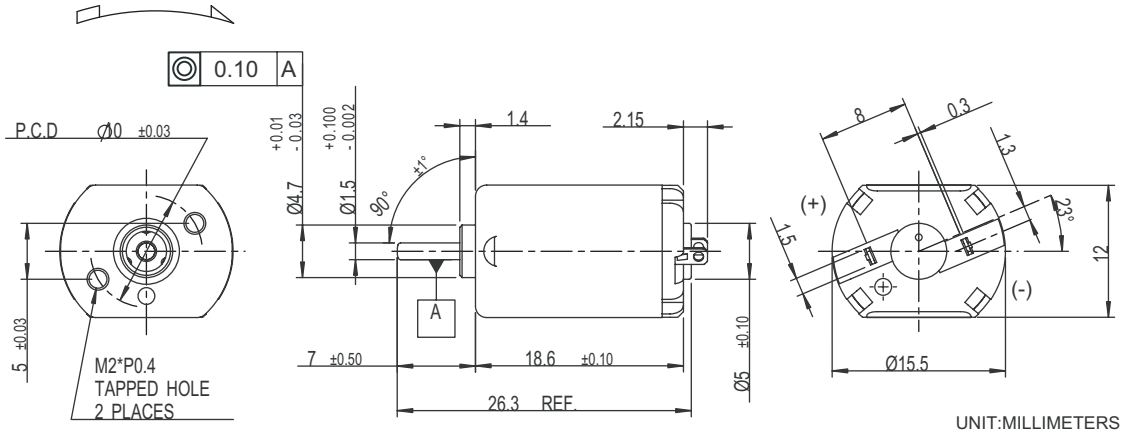
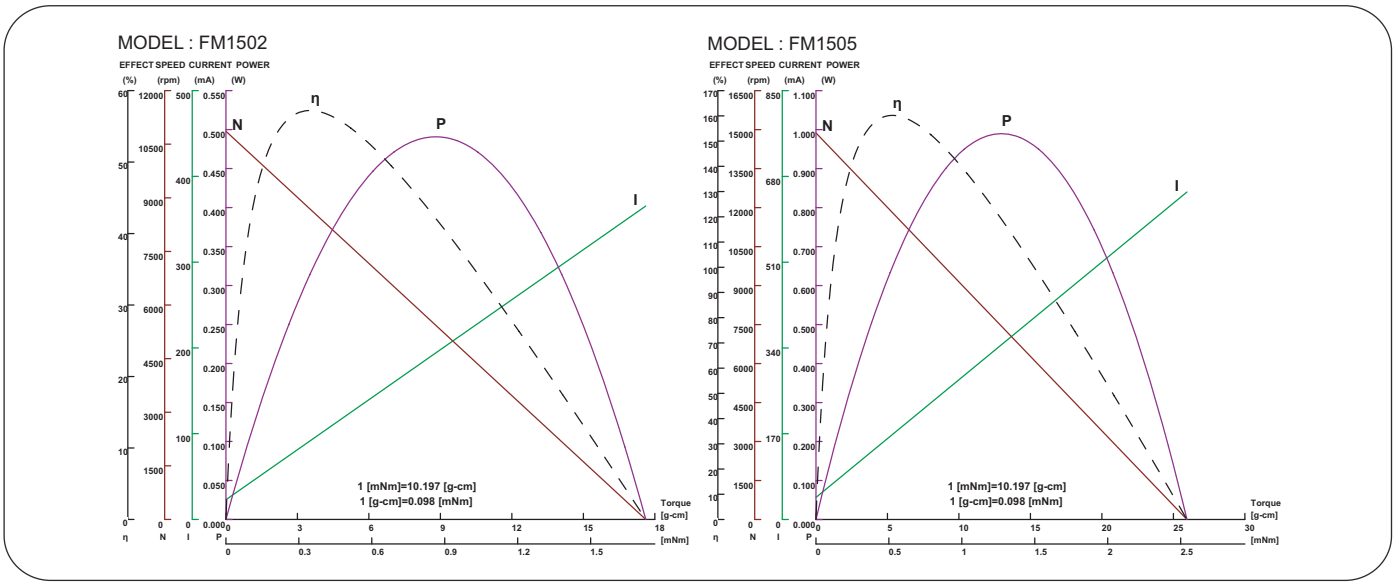
UNIT:MILLIMETERS