TRICORE

GEARED MOTOR

GM12 SERIES

Output : APPROX 0.05~1.0W
Weight : 10g (approx)

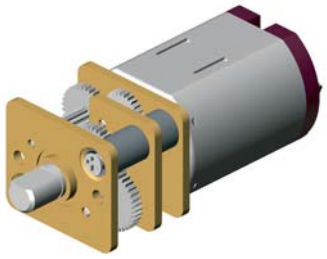

Application

Precision Instruments
Servo Machine
Door Lock

MODEL	VOLTAGE		NO LOAD		AT MAXIMUM EFFICIENCY					STALL		
	OPERATING RANGE	NOMINAL	SPEED	CURRENT	SPEED	CURRENT	TORQUE		OUTPUT	TORQUE		CURRENT
			r/min	A	r/min	A	g-cm	mN-m	W	g-cm	mN-m	A
GM1203	1.7~5.0	4.5	56	0.06	42	0.18	508	50	0.22	2000	196	0.52
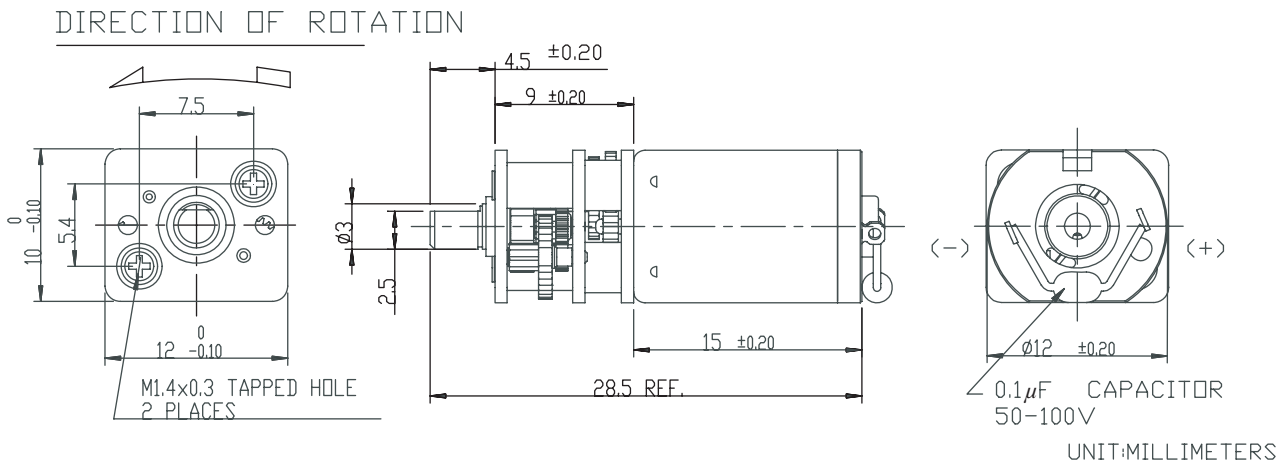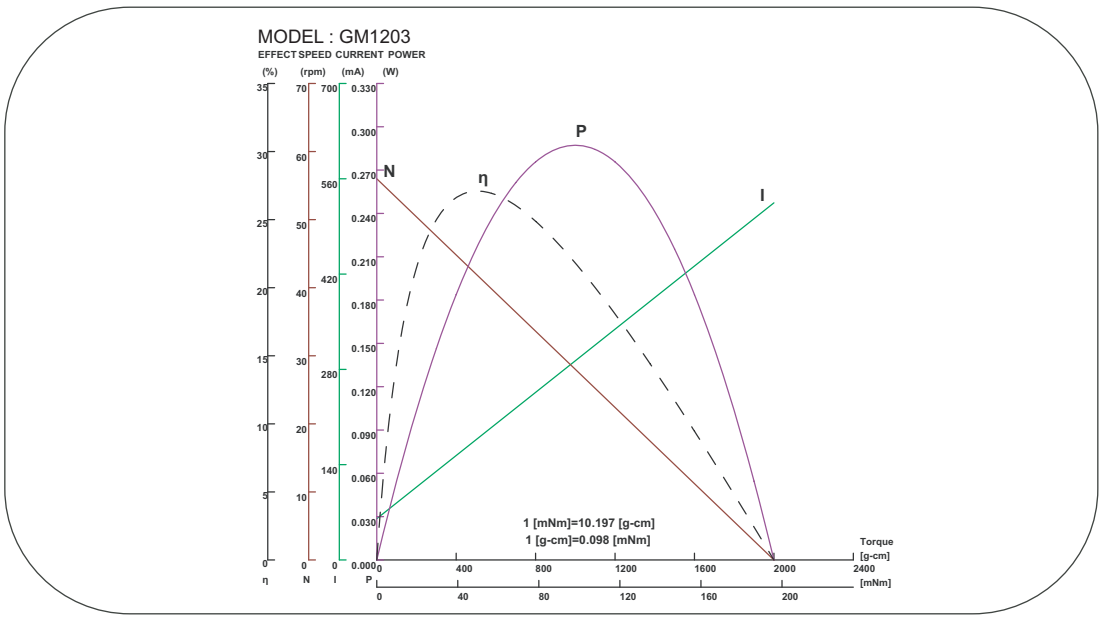
Specification GM1203