TRICORE CORPORATION
545 , SEC 3 , CHANG YUAN ROAD, HWA TANG COUNTRY,
CHANG-HWA TAIWAN
Tel:886-4-712-5688 Fax:886-4-712-5698
Email Address: tricore@tricore.com.tw

SOLENOID

MODEL

MG0707A

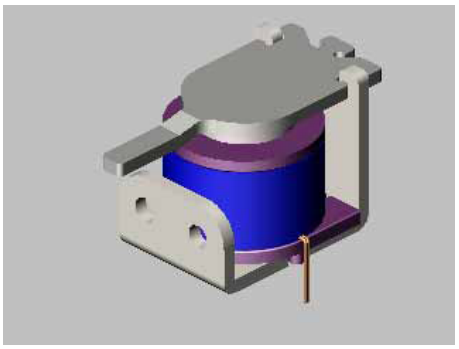

APPLICATION

☆ Camera

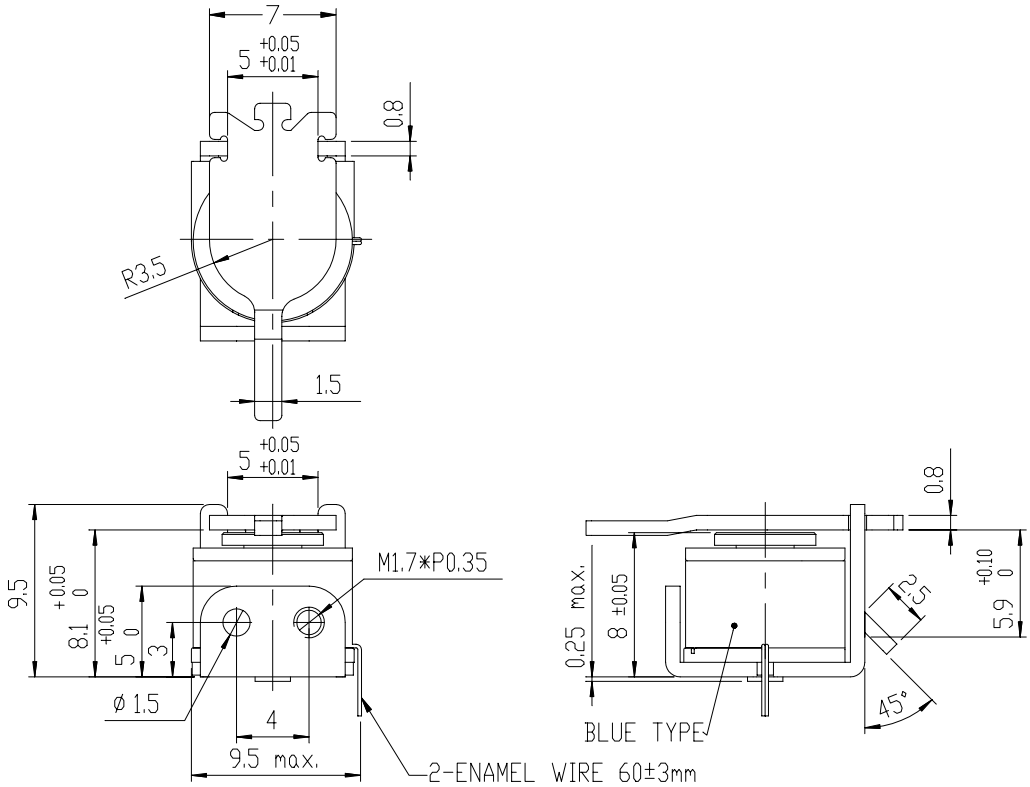

ELECTRICAL CHARACTERISTIC

1.Working Rated Voltage : 3.0 DCV
2.Operating Voltage : 2.4 ~ 3.2 DCV
3.DC Resistance : 7.5 OHM ± 7% (At 20°C)
4.Compensation Factor Of T. : +0.00393/C (20 Degree Standard)
5.Insulation Resistance : 100 M OHM MIN. At 500 DCV
6.Residual Force : Self Weight
7.Dielectric Strength : 250V AC 1 Minute
8.Coil Insulation Grade : E Class
9.Operating Temperature : -15°C to +40°C
10.Storage Temperature : -25°C to +60°C
11.Operating Humidity : 45 to 85% RH
12.Temperature Rise : Rated Continuous Below 60°C
13.Life Expectancy : 500,000 Times MIN.
14.Length of Enamel Wire : Enamel Wire 2 PCS of 60 ± 3 mm

Spec could be customized