TRICORE CORPORATION
545 , SEC 3 , CHANG YUAN ROAD, HWA TANG COUNTRY,
CHANG-HWA TAIWAN
Tel:886-4-712-5688 Fax:886-4-712-5698
Email Address: tricore@tricore.com.tw

SOLENOID

MODEL

MG1606A

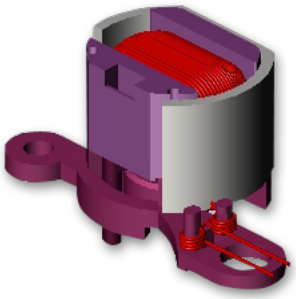

APPLICATION

☆ Camera

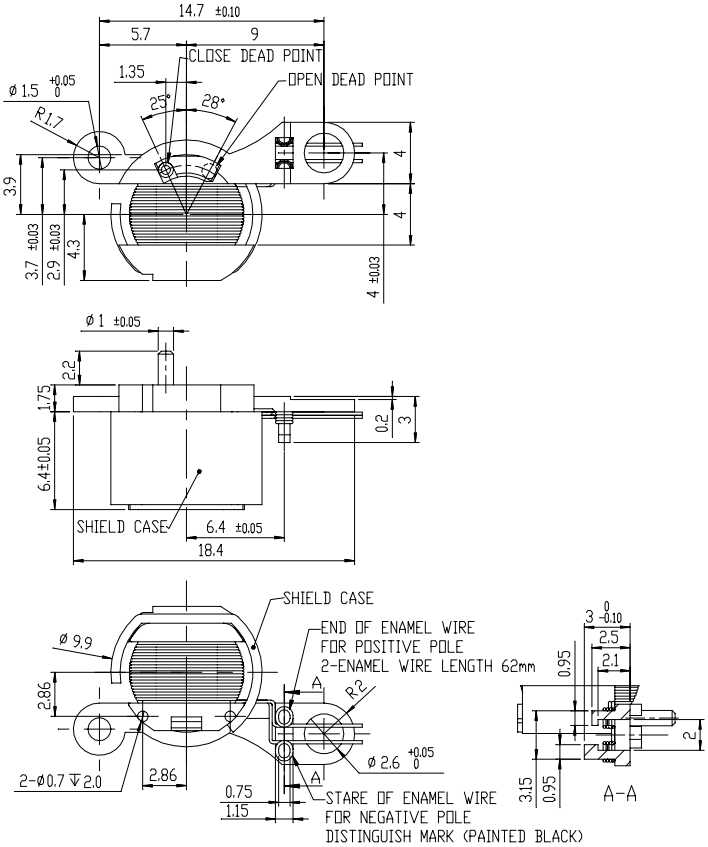

ELECTRICAL CHARACTERISTIC

1.Rated Voltage：3.0 DCV coil constant.
2.Rated Current：714 mA (3.0 DCV coil)
3.Power consumption：2.1 W (3.0 DCV coil).
4.Operating Voltage：2.0 to 3.2 DCV coil.
5.Rotation Total Operation Angle：53° ± 1.5° .
6.Holding Force：1.5gf min.
7.Movable Temperature Range：-10°C~ +40°C.
8.Storage Temperature Range：-20°C~ +60°C.
9.Output Force (CLOSE → OPEN)：7.0gf min. (Input 2.0 DCV coil with 50ms pulse).
10.DC Resistance：4.2 ohm±10% (AT 20°C).
11.Insulation Resistance：1.0MΩ min. Between coil and yoke at 100 DCV
12.Weight：Approximate 1.9 grams.
13.Life Expectancy (No load)：10,000 times min.

Spec could be customized