TRICORE

SOLENOID

MG1762B

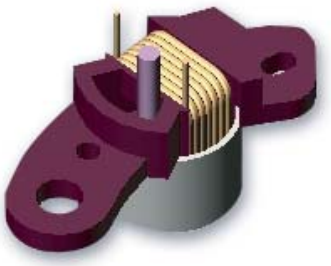

Application

Digital Camera

Specification MG1762B

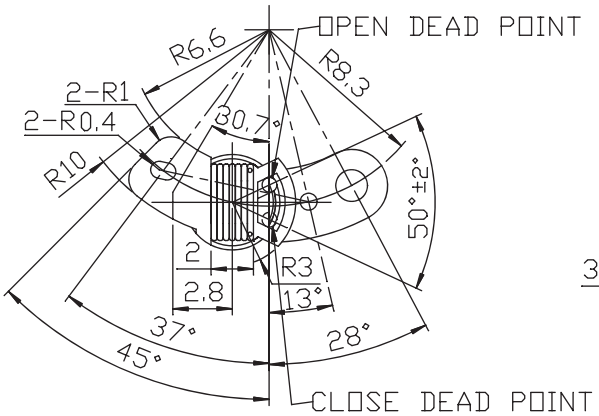

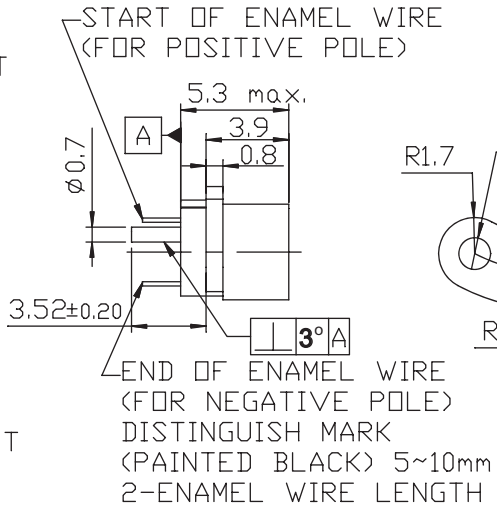

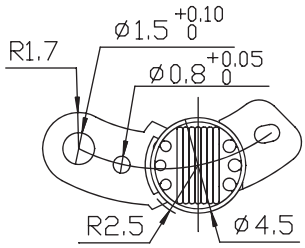

ELECTRICAL CHARACTERISTIC

1.Rated Voltage : 3.0 DCV
2.Power consumption : 0.82w. (3.0 DCV).
3.Rating Current : 273mA (3.0 DCV)
4.Rotation Total Operation Angle : 50°± 2°
5.Holding Force : OPEN→CLOSE 0.6gf MIN
CLOSE→OPEN 0.8gf MIN
6.Output Force (OPEN→CLOSE) : 1.0gf min. (Input 3.0 DCV coil with 30ms pulse).
(CLOSE→OPEN) : 1.0gf min. (Input 3.0 DCV coil with 30ms pulse).
7.Starting Voltage (OPEN→CLOSE) : 1.5 DCV coil max. With 30ms pulse (No load).
8.DC Resistance : 11Ω ± 10% (At 20℃).
9.Insulation Resistance : 1.0 Mohm Min. Between Coil And Yoke At 100 DCV
10.Coil Insulation Grade : E Class (JIS C 3002)
11.Length Of Enamel Wire : 12 ± 2mm
12.Life Expectancy : 10,000 Times MIN. With 30ms Pulse
Width & 1HZ Work Cycle
13.Movable Temperature Range : -20℃ TO +60℃
14.Storage Temperature Range : -20℃ TO +60℃
15.Pitch Between Movement & Rotation Center : 1.94m/m