TRICORE CORPORATION
545 , SEC 3 , CHANG YUAN ROAD, HWA TANG COUNTRY,
CHANG-HWA TAIWAN
Tel:886-4-712-5688 Fax:886-4-712-5698
Email Address: tricore@tricore.com.tw

SOLENOID

MODEL

MG2002

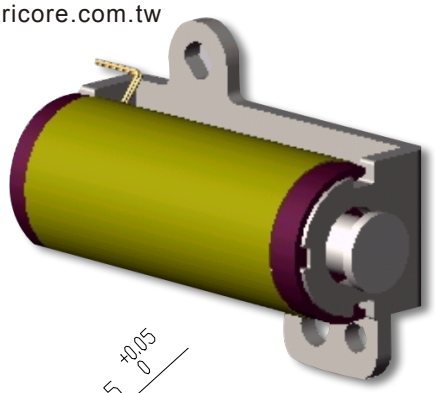

APPLICATION

☆ Camera

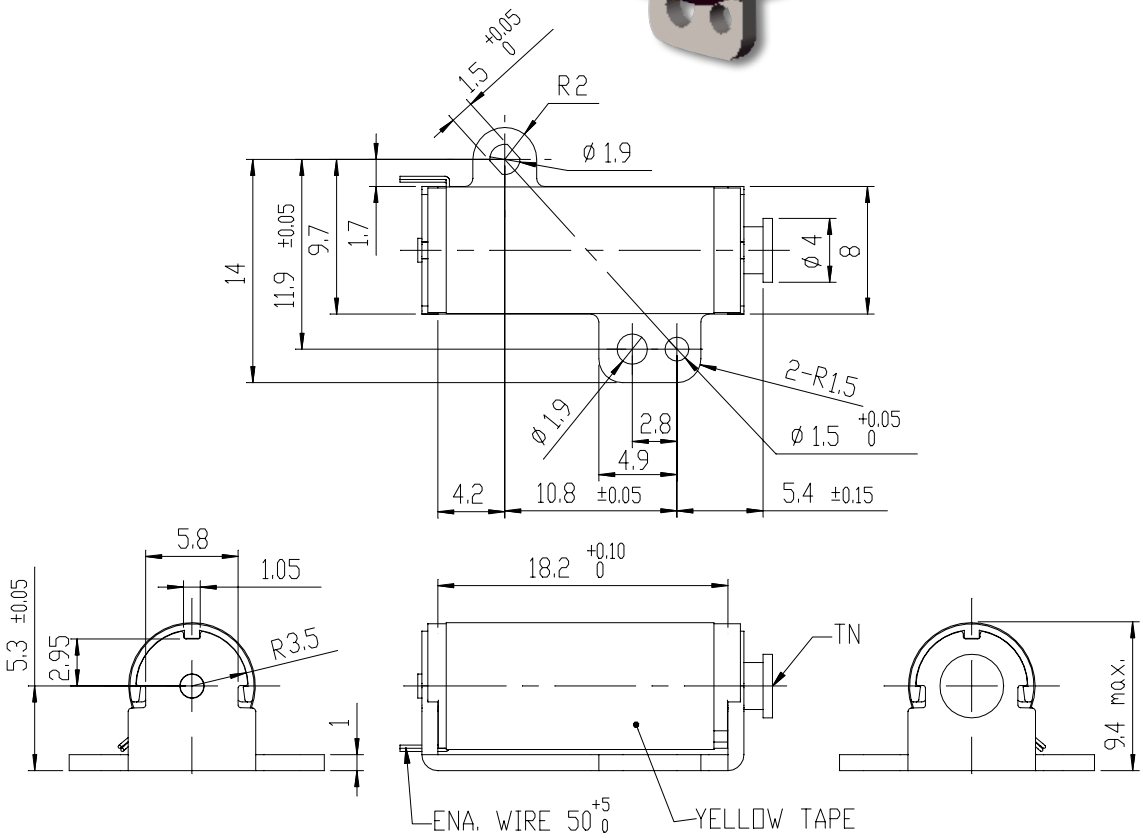

ELECTRICAL CHARACTERISTIC

1.Working Rated Voltage : 2.6 DCV
2.Operating Voltage : 2.2 to 3.2 DCV
3.Force Of Attraction : 40 gf MIN. (At Input 2.6 DCV Stroke 2 mm)
4.DC Resistance : 2.65Ω ± 7% (At 20℃)
5.Attractive Force : 120 gf MIN. (At 3.0 DCV)
6.Compensation Factor Of T. : +0.00393/C (20 Degree Standard)
7.Insulation Resistance : 100M OHM MIN. At 500 DCV
8.Residual Force : 5.0 gf MAX.
9.Dielectric Strength : 250V AC 1 Minute
10.Coil Specification : 3U＊ø 0.26＊425t
11.Operating Temperature : -15℃ to +40℃
12.Storage Temperature : -25℃ to +60℃
13.Operating Humidity : 60℃ ＊60%RH＊2HRS
14.Temperature Rise : Rated Continuous Below 60℃
15.Life Expectancy : 40,000 Times MIN. At Load 10 gf Stroke 2 mm
16.Weight Of Driver Section : 6.49 grams
17.Weight Of Moving Plunger : 0.65 grams
18.Length Of Lead : Enamel Wire 2 PCS Of 50 To 55 mm

Spec could be customized