TRICORE

STEPPING MOTOR

SRB03 SERIES

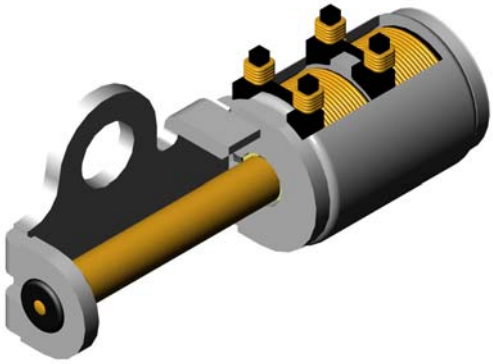

Application

Biu-raydisc Instruments

IT

MODEL	VOLTAGE			CURRE	STEP ANGLE	PHASE	DRIVE MODE	MASS
	OPERA TING RANGE		CONSTAN T	A				
21SRB 0304002	4~6V	5V	30Ω±8%	6	18°	2	BI-POLAR	0.3g

Specificati 21SRB0304002

Gear customize

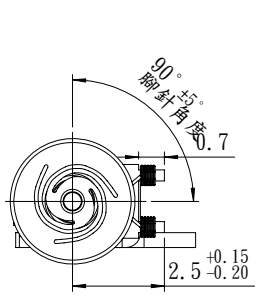

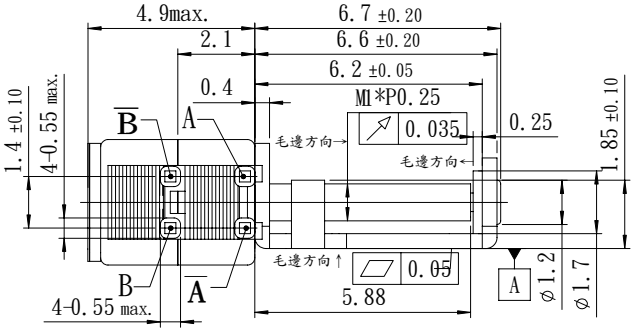

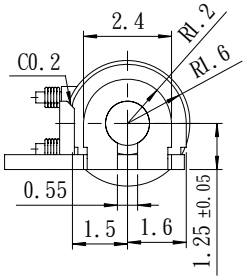

CONNECTION DIAGRAM

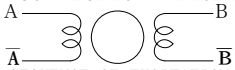

SEQUENCE OF EXCITATION

PHASE \ STEP	1	2	3	4
A	H	H	L	L
$\overline{A}$	L	L	H	H
B	H	L	L	H
$\overline{B}$	L	H	H	L

OUTPUT SHAFT ROTATION CW

PITCH	0.25
方向	右螺旋單螺紋
單一PITCH誤差	0.008 以下
累積PITCH誤差	0.012 以下
螺紋升角	5°17' 12"

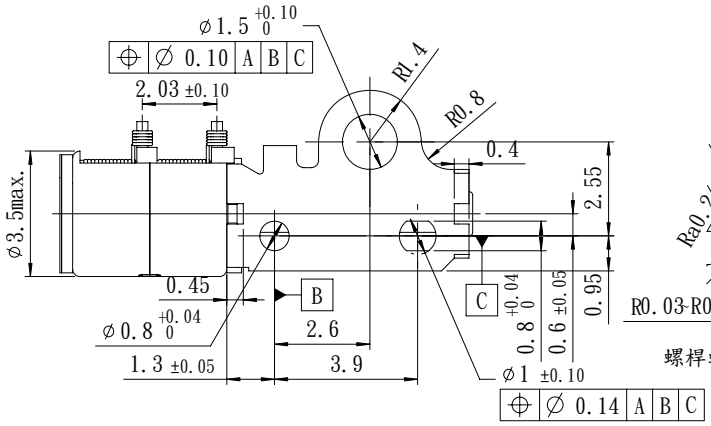

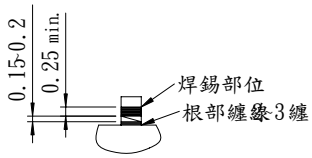

(PIN腳纏線示意圖)

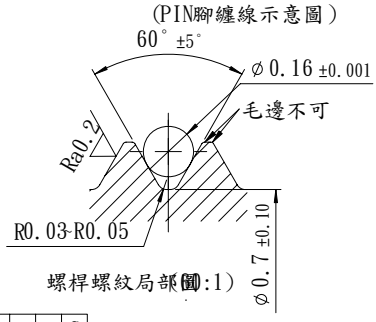

螺桿螺紋局部圖:1)