TRICORE

GEARED STEPPING MOTOR

SRB08 SERIES

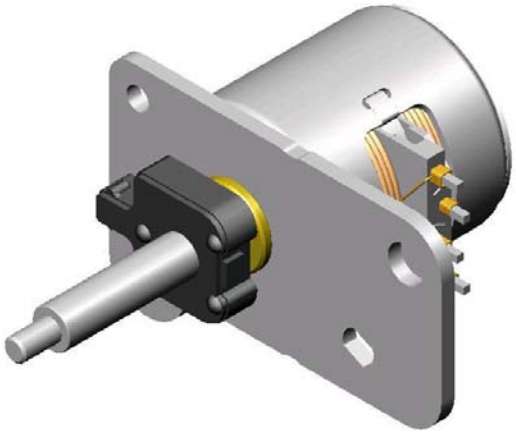

Application

Precision Instruments
Digital Camera

MODEL	VOLTAGE		CURRENT	STEP ANGLE	PHASE	DRIVE MODE	MASS
	OPERATING RANGE	NOMINAL	A	9°	2	BI-POLAR	2.44g
21SRB 0808027	3V~5V	3.9V	0.13/ Phase				

Specification 21SRB0808027

CONNECTION DIAGRAM

SEQUENCE OF EXCITATION

STEP / LINE	1	2	3	4	5	6	7	8
A	H	H	H	OFF	L	L	L	OFF
A̅	L	L	L	OFF	H	H	H	OFF
B	L	OFF	H	H	H	OFF	L	L
B̅	H	OFF	L	L	L	OFF	H	H
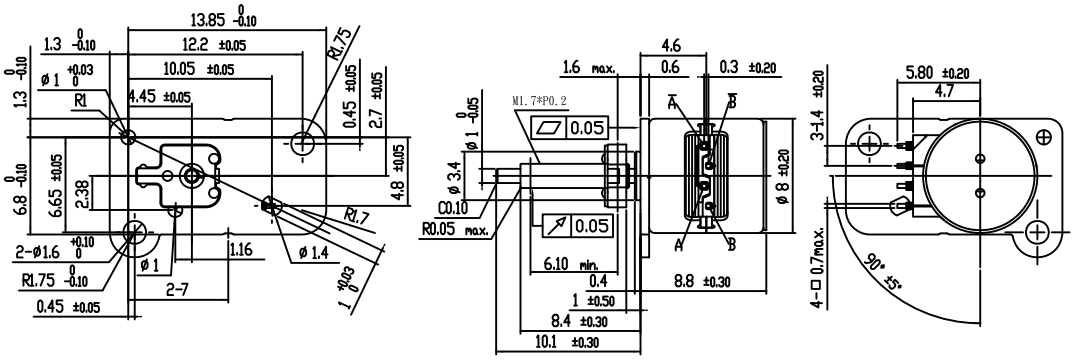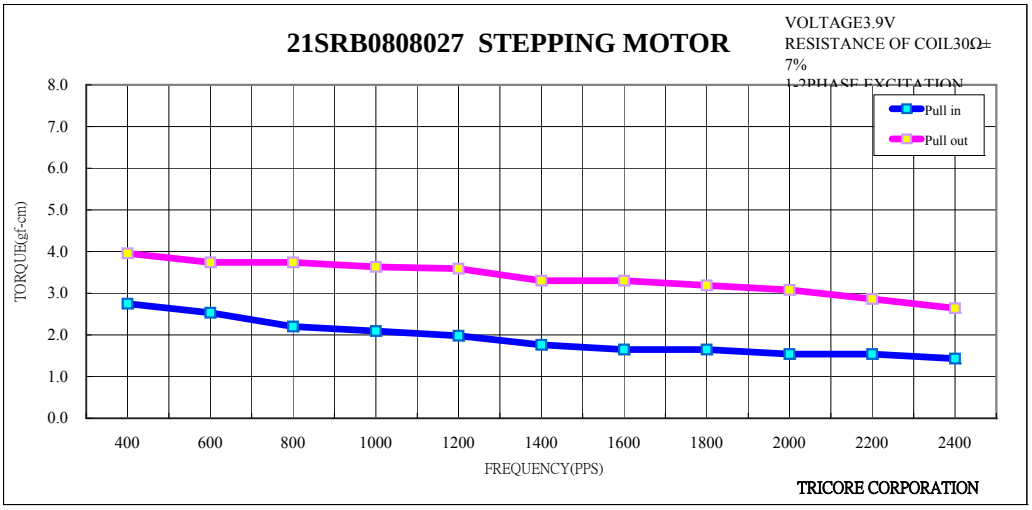
OUTPUT SHAFT ROTATION CCW→
←CW