TRICORE

GEARED STEPPING MOTOR

SRB10 SERIES

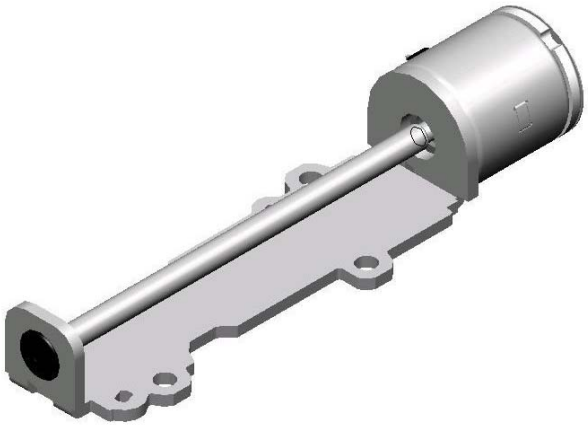

Application

Precision Instruments
CCTV

MODEL	VOLTAGE		CURRENT	STEP ANGLE	PHASE	DRIVE MODE	MASS
	OPERATING RANGE	NOMINAL	A	18°	2	BI-POLAR	7.6g
21SRB 1009003	4V~6V	5V	0.09/ Phase				

Specification 21SRB1009003

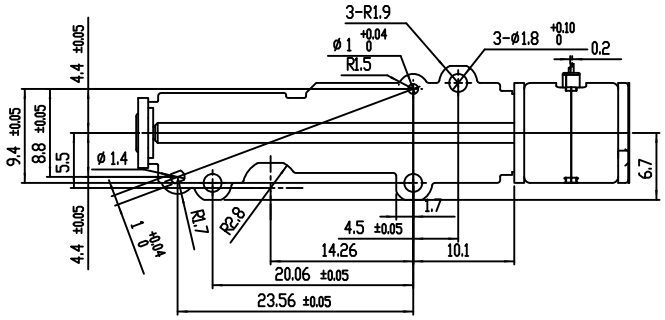

CONNECTION DIAGRAM

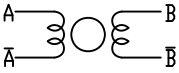

SEQUENCE OF EXCITATION

STEP / PHASE	1	2	3	4
A	H	H	L	L
Ā	L	L	H	H
B	L	H	H	L
B̄	H	L	L	H
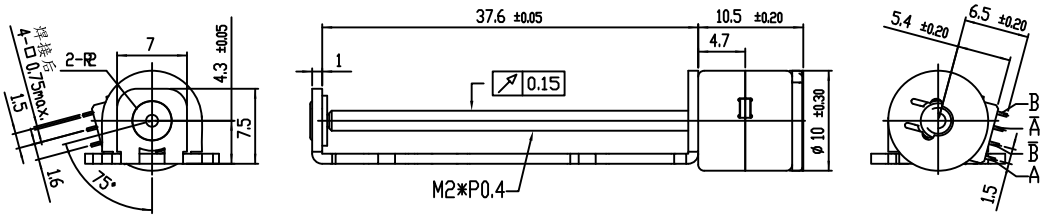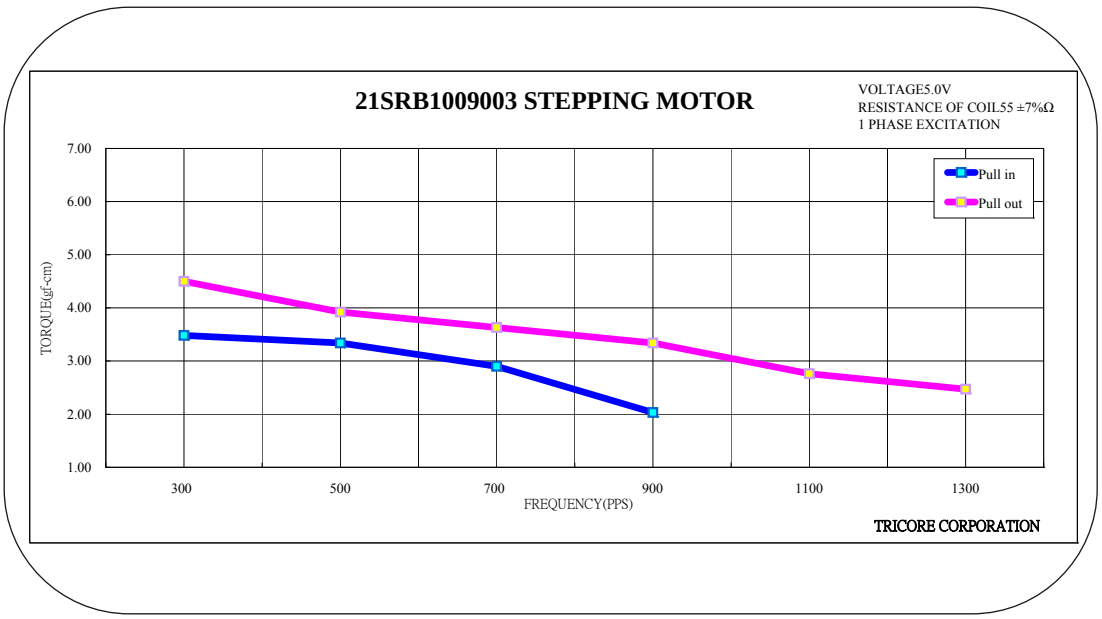
OUTPUT SHAFT ROTATION CW