TRICORE

GEARED STEPPING MOTOR

SRG06 SERIES

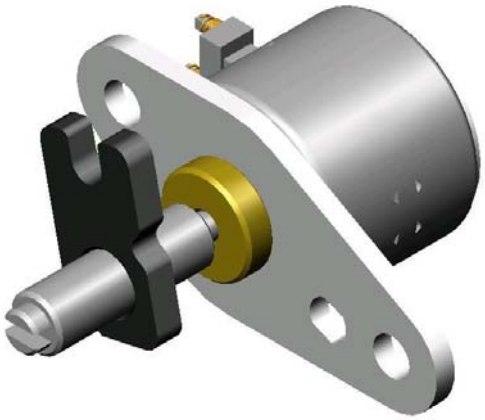

Application

Precision Instruments
DSC

MODEL	VOLTAGE		CURRENT	STEP ANGLE	PHASE	DRIVE MODE	MASS
	OPERATING RANGE	NOMINAL	A	18°	2	BI-POLAR	1.2g
21SRG 0604001	3V~5V	4.8V	0.12/ Phase				

Specification 21SRG0604001

CONNECTION DIAGRAM

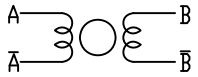

SEQUENCE OF EXCITATION

STEP / PHASE	1	2	3	4
A	H	H	L	L
Ā	L	L	H	H
B	L	H	H	L
B̄	H	L	L	H
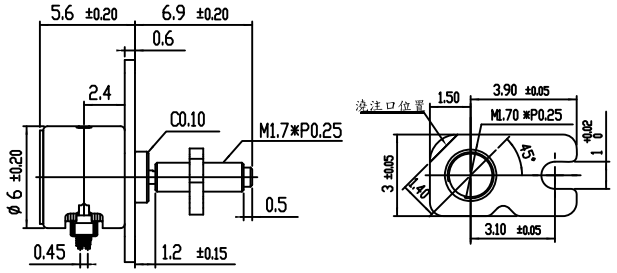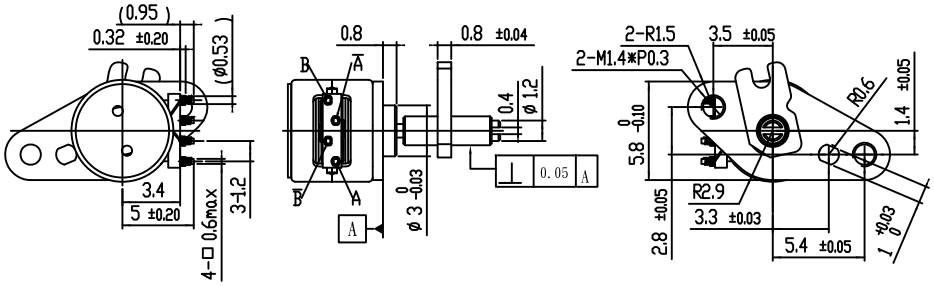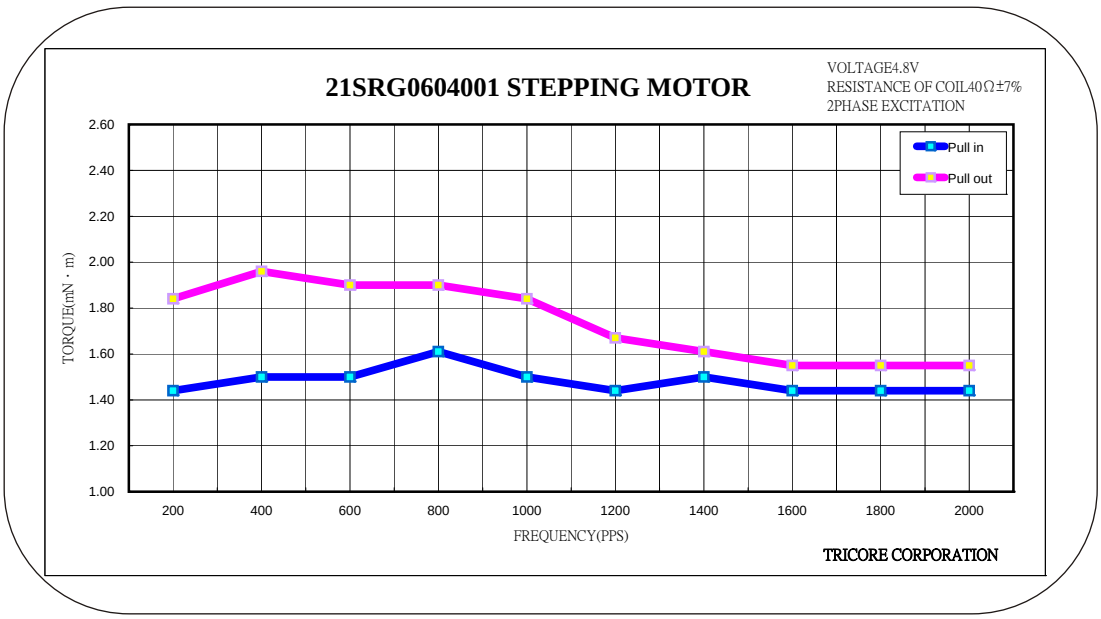
OUTPUT SHAFT ROTATION CCW