# 定時器 / TIMER AGT-660

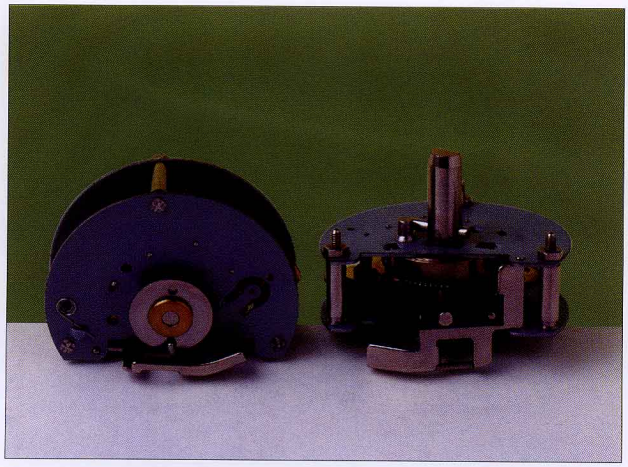

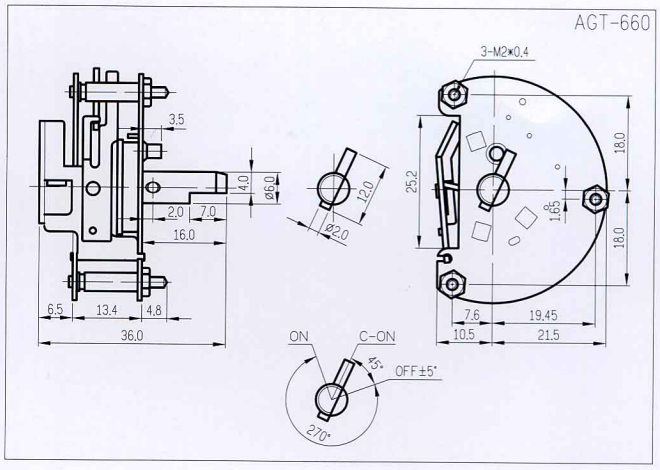


## 主要用途

*瓦斯防爆器

*其他電器定時

## APPLICATIONS

*Anti GAS-Explosion protector

*Other

## 機能特性

* 定時動作結束，自動關閉瓦斯節流器閥門，切斷瓦斯供應。
* 結構精密，故障率低，動作靈敏，精確實用。

## FEATURES

* Upon the setting time the throttle valve of the protector will be closed automatically.
* Nicely precise construction to minimize the operation trouble to almost zero.

## 規格 / SPECIFICATIONS

| | | | | | |
|---|---|---|---|---|---|
| 設定時間<br>Setting time | 60 min | 120 min | 180min | | |
| 設定方向<br>Setting direction | CW | | | | |
| 動作方向<br>Working direction | CCW | | | | |
| 操作角度<br>Working angle | 270° | | | | |
| 環境溫度<br>Working temperature | -10° C ~ 60 ° C | | | | |
| 時間精度<br>Time accuracy | ±15% | | | | |